Blackfin Aero Wire: Assembly

Blackfin Aero Special components

Ⓐ Demo lenses

Ⓑ Bridge

Ⓒ Temples

Ⓓ Nylon wire

Ⓔ Titanium Wire decoration

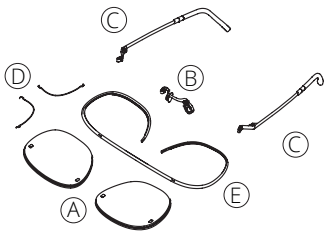

Prescription lens materials

Recommended with index 1.6, 1.67, TVX 153 and PC
Not recommended with index 1.5, 1.5 (photochromic UV filter), 1.74

Tools

Ⓕ OMA file

Ⓖ UV glue

Ⓗ Needles Ø 0.40 mm

Ⓘ UV lamp

Ⓙ Opticians' pliers

Ⓚ Nylon wire kit

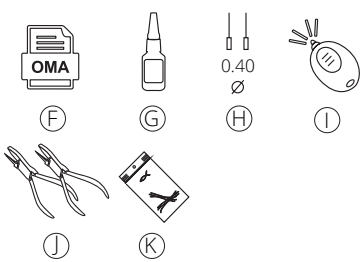

Online Tutorial

academy.blackfin.eu/aero-wire

Dismantle all the components from the dummy lenses.
Pull out the Titanium Wire decoration (E) by applying pressure from the inside to the outside, in the nose area.

N.B.: If you need to replace the nylon wire, use the replacement kit supplied (K).

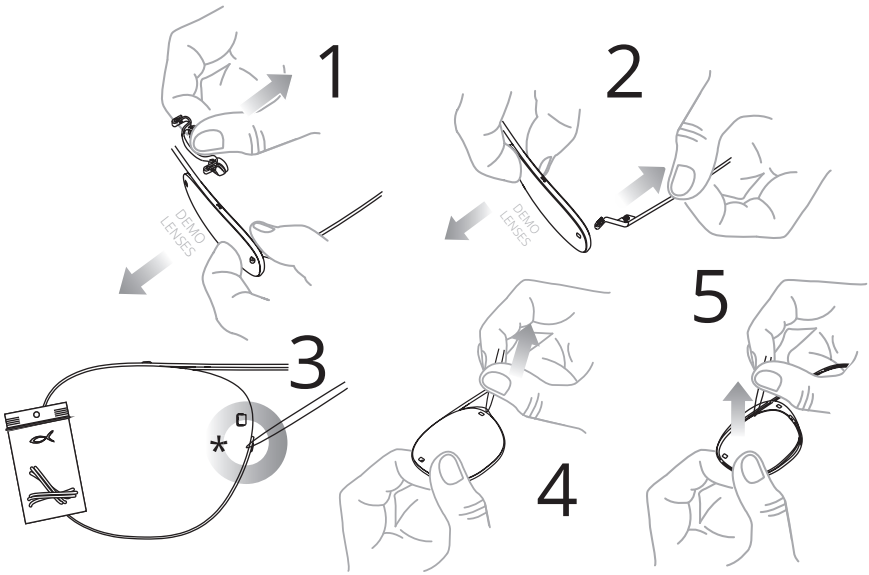

Cut the lens following the instructions in the **OMA** file or by probing the lens.

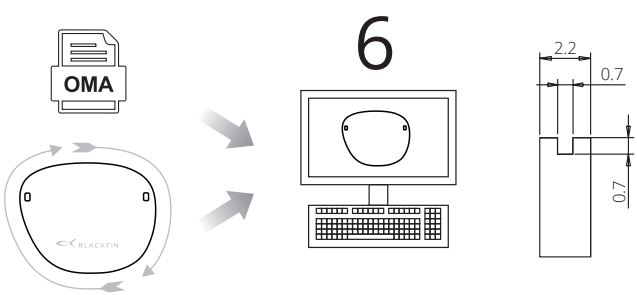

Milling diameter

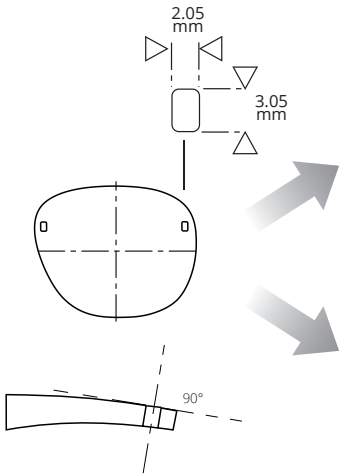

DRILLING ANGLE
Normal to front

7

METHOD **A**
with OMA file

METHOD **B**
manually

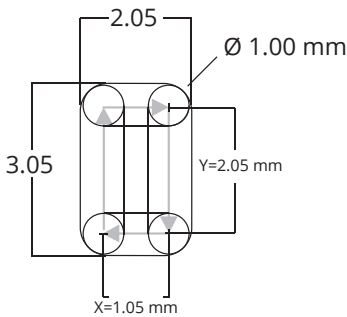

DRILL HOLE INSIGHT
A combination of 4 single hole

NB: It might be necessary to manually vary the measurements of the holes (+/- 5 hundredths of a millimetre) in order to compensate for the mechanical tolerances present in each cutting wheel/mill that depend on the calibration of the machines.

WARNING:

Do not alter the angle of the tips of the hooks, **they must be parallel.**

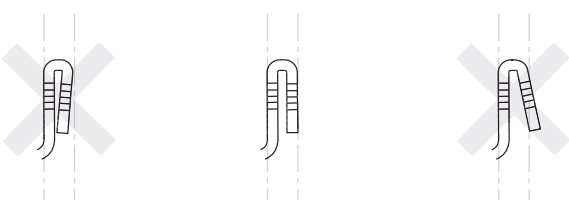

Using a Ø 0.40 mm needle (H), place a small amount of adhesive (G) just above the holes in the bridge (B).

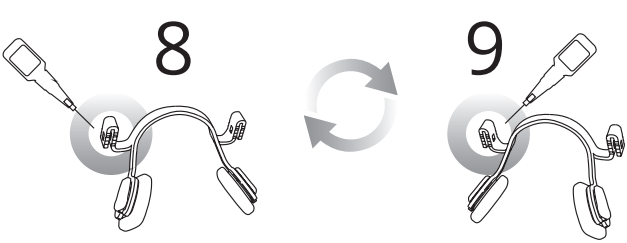

Insert the ophthalmic lenses into the Titanium Wire decoration groove cut (E), then with the help of the supplied replacement kit (K), start at an easy-to-install point (*) and slide the nylon thread and slide the nylon wire along the profile, separating the lens from the decoration (E).

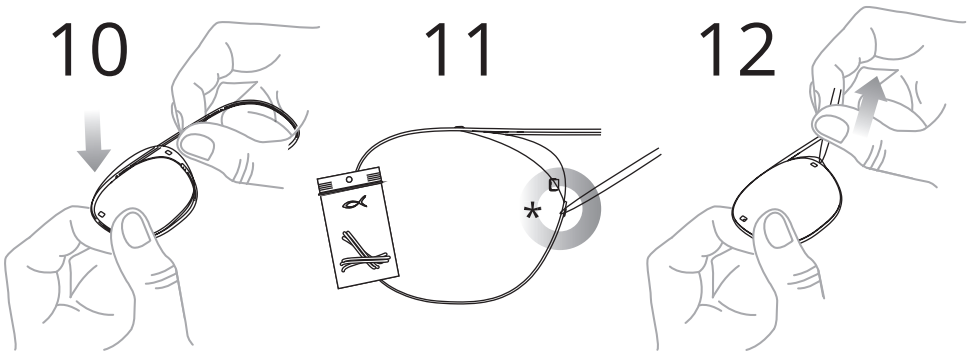

Assemble the bridge (B) with the ophthalmic lenses, taking care to respect the correct insertion as shown in figure 8. insertion as shown in figure 8. Check that the front piece is aligned, as shown in figure 9. **Dry the glue with the UV lamp for 10 sec (I).**

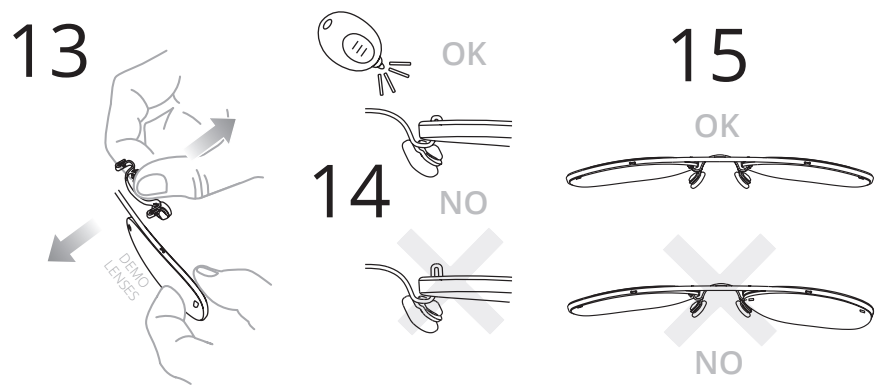

Using a Ø 0.40 mm needle (H), place a small amount of adhesive (G) just above the holes in the on the hooks.

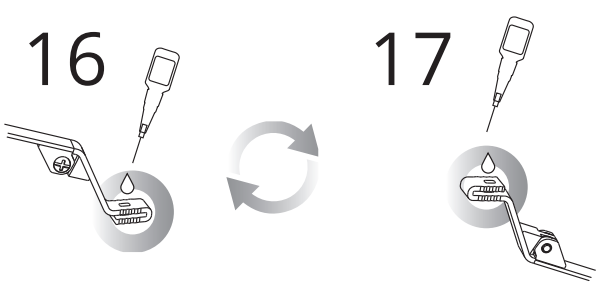

Fix the lugs and temples to the lenses (C), making sure the hooks are correctly inserted as shown in fig. 13, and that the temples are tilted properly to ensure the pantoscopic angle is 7° as shown in fig. 14.
Dry under a UV lamp for 10 seconds. (I)

18

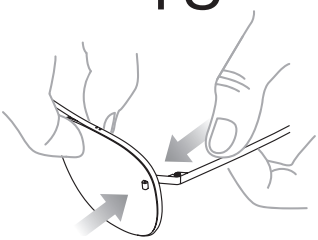

19

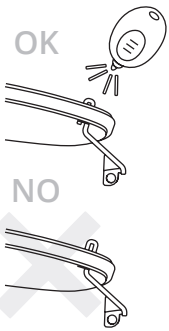

20

TIP:

To ensure the UV glue (G) adheres properly, wait a couple of hours before using the glasses.

Use two pairs of opticians' pliers (J) to make further adjustments to the pantoscopic angle and the temple angle to ensure a comfortable fit for the customer.

21

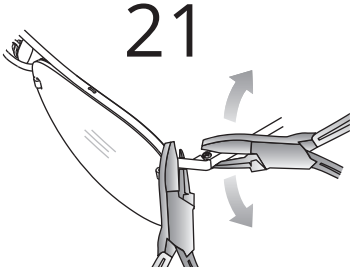

22

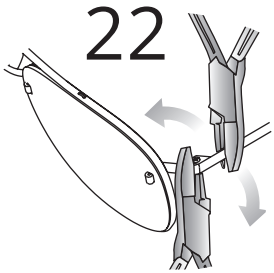

WARNING:

Always handle the parts carefully to prevent damaging their finish.